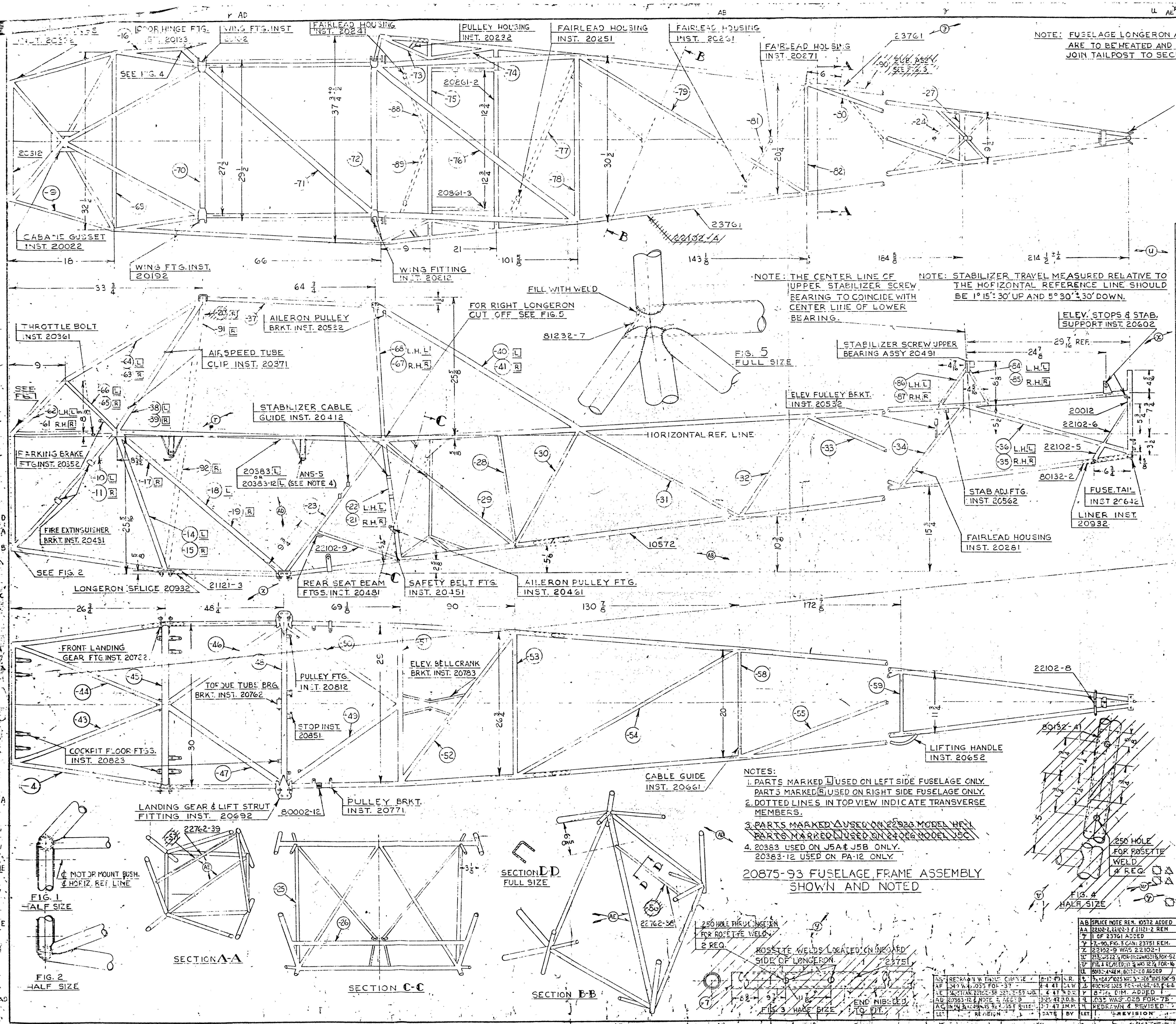
CABANE GUSSET INST. 20022
DOOR HINGE FTG. INST. 20133
WING FTG. INST. 20162
FAIRLEAD HOUSING INST. 20241
PULLEY HOUSING INST. 20232
FAIRLEAD HOUSING INST. 20251
FAIRLEAD HOUSING INST. 20261
FAIRLEAD HOUSING INST. 20271
SUB. ASSY. SEE FIG. 3
SEE FIG. 4
20312
WING FTG. INST. 20192
WING FITTING INST. 20212
20861-2
20861-3
23761
22102-4
THROTTLE BOLT INST. 20361
AIRSPEED TUBE CLIP INST. 20371
AILERON PULLEY BRKT. INST. 20522
STABILIZER CABLE GUIDE INST. 20412
PARKING BRAKE FTG. INST. 20352
20383 OR 20383-12 (SEE NOTE 4)
AN5-5
FIRE EXTINGUISHER BRKT. INST. 20431
SEE FIG. 2
LONGERON SPLICE 20932
21121-3
REAR SEAT BEAM FTGS. INST. 20481
SAFETY BELT FTG. INST. 20451
AILERON PULLEY FTG. INST. 20461
FOR RIGHT LONGERON CUT OFF SEE FIG. 5
HORIZONTAL REF. LINE
10572
22102-9
FILL WITH WELD
81232-7
FIG. 5 FULL SIZE
STABILIZER SCREW UPPER BEARING ASSY 20491
ELEV. PULLEY BRKT. INST. 20532
ELEV. STOPS & STAB. SUPPORT INST. 20602
20012
22102-6
22102-5
80132-2
STAB. ADJ. FTG. INST. 20562
FUSE. TAIL INST. 20642
LINER INST. 20932
FAIRLEAD HOUSING INST. 20281
FRONT LANDING GEAR FTG. INST. 20722
TORQUE TUBE BRG. BRKT. INST. 20762
PULLEY FTG. INST. 20812
STOP INST. 20851
ELEV. BELLCRANK BRKT. INST. 20783
COCKPIT FLOOR FTGS. INST. 20823
LANDING GEAR & LIFT STRUT FITTING INST. 20692
80002-12
PULLEY BRKT. INST. 20771
CABLE GUIDE INST. 20661
LIFTING HANDLE INST. 20652
22102-8
80132-4
.250 HOLE FOR ROSETTE WELD 4 REQ.
FIG. 4 HALF SIZE
FIG. 1 HALF SIZE
¢ MOTOR MOUNT BUSH.
¢ HORIZ. REF. LINE
FIG. 2 HALF SIZE
SECTION A-A
22762-39
SECTION C-C
SECTION D-D FULL SIZE
SECTION B-B
22762-38
.250 HOLE THRU LONGERON FOR ROSETTE WELD 2 REQ.
ROSETTE WELDS LOCATED ON INBOARD SIDE OF LONGERON
23751
FIG. 3 HALF SIZE
END NIBBLED TO FIT
L.H.
R.H.
18
33¾
64¾
66
21
101
143⅛
184
214½
26½
48¼
69⅛
90
130⅞
172⅞
29⅞ REF.
24⅞
37½
30½
27½
29½
25
20
29
26¾
30
11¾
15¼

NOTE: FUSELAGE LONGERON AND DIAGONAL TUBES ARE TO BE HEATED AND FORMED WHERE THEY JOIN TAILPOST TO SECURE PROPER FIT.

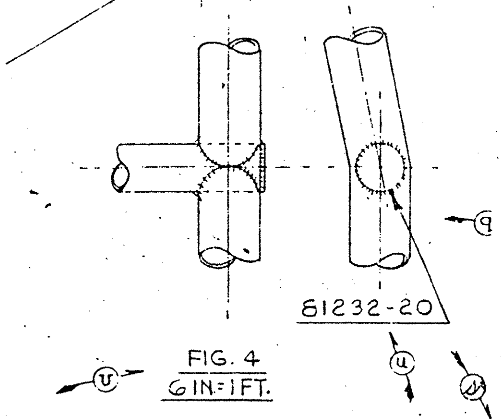

FIG. 4
6 IN = 1 FT.

NOTE: THE CENTER LINE OF UPPER STABILIZER SCREW BEARING TO COINCIDE WITH CENTER LINE OF LOWER BEARING.

NOTE: STABILIZER TRAVEL MEASURED RELATIVE TO THE HORIZONTAL REFERENCE LINE SHOULD BE 1° 15' ± 30' UP AND 5° 30' ± 30' DOWN.

NOTES:
1. PARTS MARKED L USED ON LEFT SIDE FUSELAGE ONLY. PARTS MARKED R USED ON RIGHT SIDE FUSELAGE ONLY.
2. DOTTED LINES IN TOP VIEW INDICATE TRANSVERSE MEMBERS.
3. ~~PARTS MARKED Δ USED ON 22920 MODEL HE-1 PARTS MARKED ☐ USED ON 24066 MODEL J5C~~
4. 20383 USED ON J5A & J5B ONLY. 20383-12 USED ON PA-12 ONLY.

20875-93 FUSELAGE FRAME ASSEMBLY
SHOWN AND NOTED

PART NO.	NO. REQ.	SIZE	DESCRIPTION
20383-12 OR 20383	1		THROTTLE BRACKET ASSY. (SEE NOTE 4)
10572	2		LONGERON ASS'Y.
81232-20	1		DISC
81232-7	1		DISC
84501	DWG. REF. ONLY		CHANNEL SECTION
AN15-5	2		BOLT
80132-2	2		LINER
80002-12	1		CLAMP
22102-8	1		FUSELAGE TUBES
22102-9	2		
22102-6	2		
22102-5	2		
~~22102-4~~	~~1~~		
22762-39	1		CHANNEL
22762-38	1		CHANNEL
21121-3	2		LINER
20861-3	2		BAGGAGE COMP. CHANNEL
20861-2	1		
23761	2		UPPER LONGERON ASS'Y.
20932	–		LONGERON SPLICE & LINER INST.
20851	1		STOP INST.
20823	2		COCKPIT FLOOR FTGS. INST.
20812	2		FUSE. AILERON PULLEY FTGS. INST.
20783	1		ELEV. BELL CRANK BRKT. INST.
20771	2		PULLEY BRACKET INST.
20762	1		TORQUE TUBE BEARING BRKT. INST.
20722	2		FRONT LANDING GEAR FTG. INST.
20692	2		LANDING & LIFT STRUT FTG. INST.
20661	1		CABLE GUIDE INST.
20652	1		LIFTING HANDLE INST.
20642	1		FUSELAGE TAIL FITTINGS INST.
20602	1		ELEV. STOP & STAB. SUPPORT INST.
20562	1		STABILIZER ADJ. FITTING INST.
20532	1		ELEVATOR PULLEY BRACKET INST.
20522	2		AILERON PULLEY BRACKET INST.
20491	1		STAB. SCREW UPPER BRG. ASS'Y.
20481	2		REAR SEAT BEAM FITTING INST.
20461	2		AILERON PULLEY FITTING INST.
20451	2		SAFETY BELT FITTING INST.
20431	1		FIRE EXTINGUISHER BRKT. INST.
20412	1		STABILIZER CABLE GUIDE INST.
20371	1		AIRSPEED TUBE CLIP INST.
20361	1		THROTTLE BOLT ATTACH. INST.
20352	1		PARKING BRAKE FITTINGS INST.
20322	1		BULKHEAD FITTINGS INST.
20312	1		BULKHEAD ASSY.
20281			FAIRLEAD HOUSING INST
20271	1		
20261	1		
20251	1		
20241	2		
20232	2		PULLEY HOUSING INST.
20212	2		WING FITTING
20192	1		WING FITTING INST.
20162	1		WING FITTING INST.
20133	1		DOOR HINGE FITTING INST.
20022	1		CABANE GUSSET INST.
20012	1		TAILPOST ASSY.
~~-20~~	~~1~~	~~1 × .035 × 51½~~	~~#4130 STL. TUBE~~
-92	1	1 × .035 × 26	#4130 STL. TUBE
-91	1	1 × .035 × 25¼	
~~-90~~	~~–~~	~~SUB ASSY. CONSISTS OF -7 & 23751~~	
-89	1	½ × .028 × 26⅞	#1025 STL. TUBE

		PART NO.	NO. REQ.	SIZE	DESCRIPTION
	☐	-88	1	½ × .028 × 2½	#1025 STL. TUBE
Δ	☐	-87	1	½ × .028 × 10⅝	
Δ	☐	-86	1	½ × .028 × 10⅜	
Δ	☐	-85	1	½ × .028 × 8⅝	
Δ	☐	-84	1	½ × .028 × 8⅝	
Δ	☐	-82	1	½ × .028 × 19¾	
Δ	☐	-81	1	½ × .028 × 23½	
Δ	☐	-80	1	⅝ × .028 × 43⅜	
Δ	☐	-79	1	⅝ × .028 × 45¼	
Δ	☐	-78	1	⅞ × .035 × 30⅜	#4130 STL. TUBE
Δ	☐	-77	1	⅞ × .028 × 36¾	
	☐	-76	1	1⅛ × .035 × 52¼	
	☐	-75	1	¾ × .035 × 35⅞	
	☐	-74	2	½ × .028 × 11⅝	#1025 STL. TUBE
	☐	-73	2	½ × .028 × 9⅜	
Δ	☐	-72	1	1 × .035 × 27½	#4130 STL. TUBE
Δ	☐	-71	1	1 × .035 × 40⅞	
Δ	☐	-70	1	1 × .049 × 27⅝	
Δ	☐	-69	1	¾ × .035 × 32⅛	
Δ	☐	-68	1	⅝ × .035 × 25⅛	#1025 STL. TUBE
Δ	☐	-67	1	⅝ × .035 × 25⅛	
Δ	☐	-66	1	⅝ × .028 × 22⅝	
Δ	☐	-65	1	⅝ × .028 × 29¼	
Δ	☐	-64	1	¾ × .035 × 33	#4130 STL. TUBE
Δ	☐	-63	1	¾ × .035 × 32⅞	
Δ	☐	-62	1	¾ × .035 × 16¾	
Δ	☐	-61	1	¾ × .035 × 16¾	
Δ	☐	-59	1	½ × .028 × 11⅜	#1025 STL. TUBE
Δ	☐	-58	1	½ × .028 × 19⅜	
Δ	☐	~~-57~~	~~1~~	~~19½ LONG~~	~~PIPER SECTION 84501-2~~
Δ	☐	~~-56~~	~~1~~	~~22 LONG~~	
Δ	☐	-55	1	⅝ × .028 × 45	#1025 STL. TUBE
Δ	☐	-54	1	⅝ × .028 × 46¾	
Δ	☐	-53	1	¾ × .035 × 26¼	#4130 STL. TUBE
Δ	☐	-52	1	¾ × .049 × 31½	
Δ	☐	-51	1	1 × .049 × 28¾	
Δ	☐	-50	1	1 × .049 × 25¾	
Δ	☐	-49	1	1 × .049 × 25¾	
Δ	☐	-48	1	1 × .049 × 29¾	
Δ	☐	-47	1	1 × .049 × 25½	
Δ	☐	-46	1	1 × .049 × 25⅝	
Δ	☐	-45	1	1¼ × .058 × 30½	
Δ	☐	-44	1	⅝ × .035 × 28	#1025 STL. TUBE
Δ	☐	-43	1	⅝ × .035 × 28	
Δ	☐	-41	1	1 × .035 × 44½	#4130 STL. TUBE
Δ	☐	-40	1	1 × .035 × 44⅜	
Δ	☐	-39	1	¾ × .035 × 29¾	
Δ	☐	-38	1	¾ × .035 × 29⅞	
Δ	☐	-37	2	¾ × .049 × 31¼	
Δ		-36	1	⅝ × .028 × 31¾	#1025 STL. TUBE
		-35	1	⅝ × .028 × 31¾	
Δ		-34	2	⅝ × .028 × 18½	
Δ		-33	2	⅝ × .028 × 32⅝	
Δ		-32	2	⅝ × .028 × 21¾	
Δ		-31	2	⅝ × .028 × 33½	
Δ		-30	2	⅝ × .028 × 23⅞	
Δ		-29	2	⅝ × .028 × 31⅞	
		-28	2	⅝ × .028 × 19¾	
Δ	☐	-27	1	¾ × .049 × 9¼	#4130 STL. TUBE
	☐	-26	1	¾ × .035 × 30⅝	#1025 STL. TUBE
	☐	-25	2	½ × .028 × 22½	
Δ	☐	-24	1	½ × .028 × 21⅞	
Δ		-23	2	⅝ × .035 × 30¼	
Δ		-22	1	¾ × .035 × 22⅞	#4130 STL. TUBE
		-21	1	¾ × .035 × 22⅞	
Δ	☐	-19	1	⅞ × .035 × 24⅞	
Δ	☐	-18	1	⅞ × .035 × 39⅝	
Δ	☐	-17	1	⅞ × .035 × 14½	
Δ	☐	-16	1	¾ × .035 × 13¾	
Δ	☐	-15	1	¾ × .049 × 27⅛	
Δ	☐	-14	1	¾ × .049 × 26⅞	
Δ	☐	-11	1	⅞ × .028 × 27⅞	#1025 STL. TUBE
Δ	☐	-10	1	⅝ × .028 × 27⅝	
Δ	☐	-9	2	⅝ × .049 × 18 3/16	
		~~-7~~	~~1~~	~~¾ × .035 × 15½~~	
Δ	☐	-4	2	¾ × .035 × 27⅝	#4130 STL. TUBE
Δ	☐	-3	–	CONSISTS OF 10572, 22102-9, 23761 21121-3, 80132-2, -21, -23, -28, -29, -30, -31, 32, -33, -34, -35.	
	☐	-2	–	CONSISTS OF 10572, 23761, 22102-9, 80132-2, 21121-3, -22, -23, -28, -29, -30, -31, -32, -33, -34, -36, 20383 or 20383-12 (SEE NOTE 4)	

LET.	REVISION	DATE	BY
AG	REDRAWN WITHOUT CHANGE	8-17-49	L.R.
AF	.049 WAS .035 FOR -37	6-4-47	C.L.W.
AE	⅝-57 CAN. 22762-38 22762-39 ADD.	6-4-47	R.D.R.
AD	20383-12 & NOTE 4 ADDED	3-25-47	R.D.B.
AC	IN -54 ¾ × .049 WAS ⅝ × .035 [illegible]	3-7-47	I.M.M.
AB	SPLICE NOTE REM. 10572 ADDED	4-10-46	C.E.K.
AA	22102-2, 22102-3 & 21121-2 REM	4-[illegible]-46	C.E.K.
z	1 OF 23761 ADDED	3-12-46	C.E.K.
y	-7, -90, FIG. 3 CAN: 23751 REM.	3-12-46	C.E.K.
x	22102-9 WAS 22102-1	11-[illegible]-45	L.R.
w	25⅝ WAS 22⅞ FOR -31; 26 WAS 31⅛ FOR -92	11-[illegible]-45	I.D.S.
v	FIG. 4 REVISED; 13¾ WAS 12¼ FOR -16	11-23-45	I.D.B.
u	80132-4 REM.; 80132-20 ADDED	11-23-45	I.D.B.
t	⅝ × .049 #1025 WAS ½ × .028 #1025 FOR -9	11-13-45	L.R.
s	4130 WAS 1025 FOR -61, -62, -63, & -64	11-13-45	L.R.
r	8 21/32 DIM. ADDED	11-8-45	L.R.
q	.035 WAS .028 FOR -75	10-5-45	E.L.N.
n	REDRAWN & REVISED	2-11-44	C.E.K.

MODEL	PER PLANE	NEXT ASSEMBLY	SUPERSEDES	SUP. BY
~~J5A~~	~~1~~	~~22100-F~~		
~~J5B~~	~~1~~	~~22100-F~~		

THIS DRAWING IS THE PROPERTY OF THE PIPER AIRCRAFT CORP. AND ITS POSSESSION BY UNAUTHORIZED PERSONS SHALL NOT BE CONSTRUED AS PERMISSION TO REPRODUCE FOR SALE, IN WHOLE OR IN PART, ANY DEVICES SHOWN THEREON.

PIPER AIRCRAFT CORP.
LOCK HAVEN, PENNA.

~~PART No.~~	~~No. REQ.~~	MATERIAL
SCALE 1½ IN. = 1 FT. & NOTED		TOTAL WT.—LBS.
FINISH—PIPER SPECIFICATION #10		
MANUFACTURING PRACTICES—PIPER SPECIFICATION #9		

FRAME ASSEMBLY — FUSELAGE

DRAFTSMAN	CHECKER	STANDARDS
KELLER 2-11-44	C.K. 2-22-44	

20875